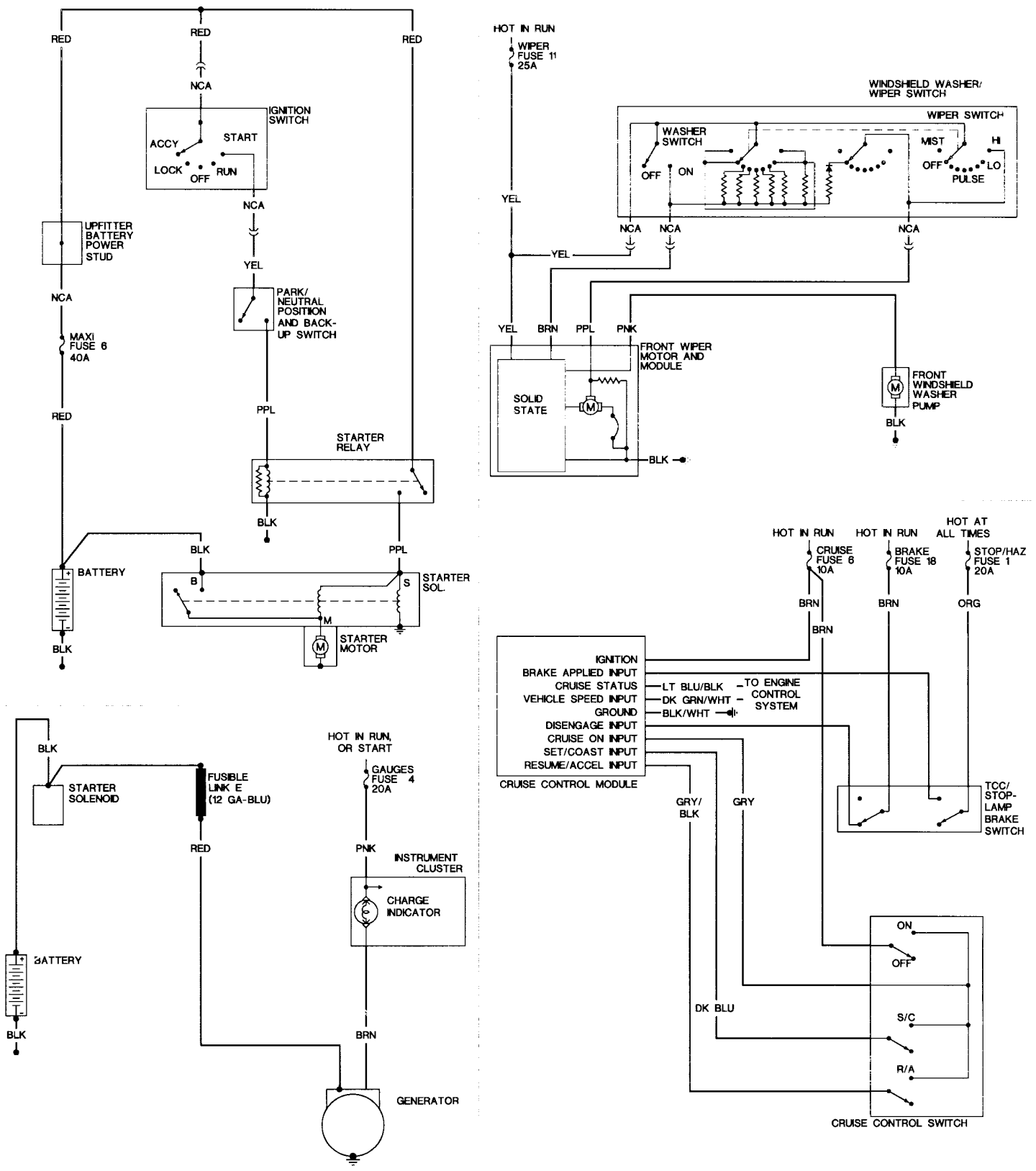
RED
RED
RED
NCA
IGNITION SWITCH
ACCY
START
LOCK
OFF
RUN
NCA
UPFITTER BATTERY POWER STUD
YEL
NCA
PARK/ NEUTRAL POSITION AND BACK-UP SWITCH
MAXI FUSE 6 40A
RED
PPL
STARTER RELAY
BLK
BLK
PPL
BATTERY
B
S
STARTER SOL.
M
STARTER MOTOR
BLK
HOT IN RUN
WIPER FUSE 11 25A
WINDSHIELD WASHER/ WIPER SWITCH
WIPER SWITCH
WASHER SWITCH
OFF
ON
MIST
HI
OFF
LO
PULSE
YEL
NCA
NCA
NCA
YEL
YEL
BRN
PPL
PNK
FRONT WIPER MOTOR AND MODULE
SOLID STATE
M
BLK
FRONT WINDSHIELD WASHER PUMP
M
BLK
HOT IN RUN
HOT IN RUN
HOT AT ALL TIMES
CRUISE FUSE 6 10A
BRAKE FUSE 18 10A
STOP/HAZ FUSE 1 20A
BRN
BRN
ORG
BRN
IGNITION
BRAKE APPLIED INPUT
CRUISE STATUS
VEHICLE SPEED INPUT
GROUND
DISENGAGE INPUT
CRUISE ON INPUT
SET/COAST INPUT
RESUME/ACCEL INPUT
LT BLU/BLK
DK GRN/WHT
BLK/WHT
TO ENGINE CONTROL SYSTEM
CRUISE CONTROL MODULE
GRY/ BLK
GRY
TCC/ STOP-LAMP BRAKE SWITCH
ON
OFF
DK BLU
S/C
R/A
CRUISE CONTROL SWITCH
BLK
STARTER SOLENOID
FUSIBLE LINK E (12 GA-BLU)
HOT IN RUN, OR START
GAUGES FUSE 4 20A
RED
PNK
INSTRUMENT CLUSTER
CHARGE INDICATOR
BATTERY
BLK
BRN
GENERATOR