SYSTEM WIRING DIAGRAMS
2.4L, Engine Performance Circuits (1 of 3)

1997 Dodge Grand Caravan

For DIAKOM-AUTO http://www.diakom.ru Taganrog support@diakom.ru (8634)315187

Copyright © 1998 Mitchell Repair Information Company, LLC
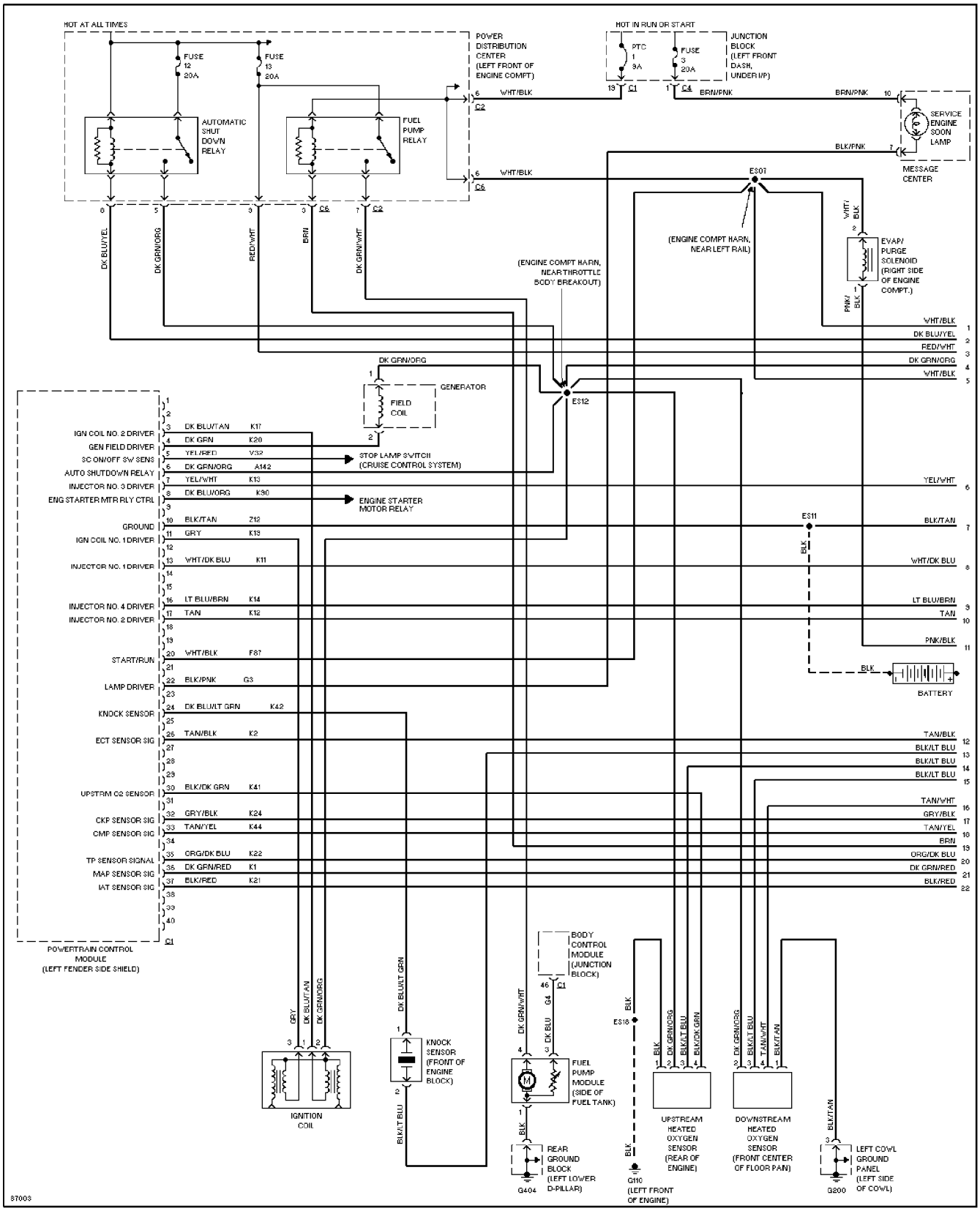
Tuesday, December 12, 2000 03:08PM